Operating and maintenance instructions

WAREMA Awning window system

*Der SonnenLicht**Manager***

Original instructions
To be handed over to the operator.
Please keep for future use.

Valid from 17 April 2024
Document number 2030548 [Rev. 4 - en]

Table of contents

1 Introduction ... 3

1.1 Information on safety ... 3
1.2 Information on the target group and application of these instructions ... 3
1.3 Explanation of the signal words ... 3
1.4 Basic safety instructions ... 3

2 Product information ... 5

2.1 Intended use ... 5
2.2 Parts description ... 5
2.3 Electric drive data ... 7
2.4 Wind resistance ... 8
2.5 Declaration of performance ... 10

3 Operation ... 11

3.1 Product with motor ... 11
3.2 Incorrect operation ... 11

4 Service ... 13

4.1 Cleaning and care ... 13
4.2 Maintenance ... 15
4.3 What you should know about awning fabrics ... 16
4.4 Spare parts ... 16
4.5 Repair ... 16
4.6 Warranty ... 17

5 Dismantling/disposal ... 17

6 Troubleshooting ... 19

7 Declaration of Conformity ... 20

1 Introduction

1.1 Information on safety

It is important to follow these instructions in the interest of personal safety. Failure to comply with these instructions when operating the product may result in personal injury and/or property damage. Failure to comply with these instructions relieves WAREMA of liability.

Warnings are marked in the instructions with this symbol or a similar symbol.

- Read through the product instructions before use.
- Observe the safety, operating and maintenance instructions.
- Include these instructions when passing the product on to a new owner.
- Keep the instructions for use until you dispose of the product.

1.2 Information on the target group and application of these instructions

Target group

These instructions are directed at people who operate, care for and/or maintain the product.

The activities listed in the "Maintenance" chapter are only permitted to be executed by a qualified specialist.

Contents

These instructions are an integral part of the following product: Awning window system

The instructions contain important information on the operation, care and maintenance of this item. They describe how to operate products with WAREMA standard drives. Other drives and special solutions are not dealt with.

Permissible activities

Performing tasks on the product that are not described in these instructions is not permissible. No other alterations, additions, conversions or maintenance work is to be carried out on the product other than as described in these instructions without the written approval of WAREMA.

1.3 Explanation of the signal words

DANGER
Identifies an imminent danger that may result in death or serious injury.

WARNING
Identifies a potential danger that may result in death or serious injury.

CAUTION
Identifies a potential danger that may result in light injury.

NOTICE
Identifies a potential situation that may result in product or property damage.

1.4 Basic safety instructions

The safety instructions and warnings described here are intended to safeguard your health and to protect the product. These instructions must be read carefully and followed.

Damage resulting from inappropriate use or the failure to follow these instructions is not covered by the warranty. Liability will not be accepted for secondary damage.

General operation

The operation of a faulty product may injure persons and/or damage adjacent parts.

- ▶ Only operate the product if it is in technically perfect condition.
- ▶ If the product makes unusual noises or movements, stop using it immediately and inform a qualified specialist.

Possible risk during operation

Incorrect operation can result in personal injury. The movements of the product can lead to crushing of the limbs.

- ▶ While the product is moving, do not reach between the moving parts.
- ▶ Do not reach into openings on the product while operating the product.

Monitoring duty during operation

Failure to monitor the product while it is moving may result in personal injury and property damage.

- ▶ Keep people and animals out of the projection area.
- ▶ Remove obstacles from the projection area.

Operation in the event of a power supply interruption

An electrically-operated product cannot be operated without power. A lowered product may be subjected to impermissible loads when bad weather fronts pass over or during power failures. This may also result in serious personal injury and/or damage to the product.

- ▶ In windy areas with frequent power failures, manual emergency operation or an emergency power supply should be considered

Accessing the operating element (electrically operated product)

The operating element is not intended for children to use. Children are unable to recognize the danger associated with the product. Persons can become injured from careless use.

- ▶ Do not allow children to play with the locally installed control system or operating element.
- ▶ The hand-held transmitter must be kept out of the reach of children.

Operation in wind

The product is only able to withstand the loads associated with the specified wind speed limits (see the wind resistance section in these instructions). Before bad weather arrives special precautions must be taken. Even when using a control, sudden strong gusts of wind can damage the product, e.g. after the control has triggered the move command to raise the product to the upper limit position.

- ▶ The product must be raised if the wind speed limits are exceeded (see wind resistance chapter in these instructions).
- ▶ Before bad weather arrives, the product must be raised by hand immediately.
- ▶ All other movements of the product must be prevented while the wind speed limit is exceeded.

Operation in wet weather

Moisture promotes wrinkling and waffling and deteriorates the awning fabric.

- ▶ Once the rain has stopped, awning fabric that has become wet should be extended so that it can dry.

Operation in icy conditions/winter (general procedure)

The operation of the product with temperatures around or below the freezing point can lead to malfunctions and/or damage to property in the case of unfavourable installation and building situations. After an impact with condensation water, rain or snow the product can freeze up with low temperatures.

- ▶ Before operation the product must be freed from snow and ice in order to make it operable.
- ▶ The operation of the product while iced over is forbidden.

Operation in winter (product with control system)

Products operated by a control system may start moving at any time and without prior notice. After an impact with condensation water, rain or snow the product can freeze up with low temperatures. Operation of the product may cause damage.

- ▶ When using a control system without an ice alarm, the automatic control mode should be switched off in winter.

Malfunction due to leaves or foreign objects

External sun shading systems are exposed to weather and environmental influences. Depending on the location, leaves and other foreign objects can cause the product to malfunction.

- ▶ Remove leaves and other foreign bodies from the box and awning fabric.

Special features awning fabric

The awning fabric can become electrostatically charged. Contact with people or objects may result in an electrostatic discharge from charged fabric.

Risk of damage to the product

An additional load can damage the product and/or cause it to detach from its mount.

- ▶ Do not hold onto the product or lean any objects against it.

2 Product information

2.1 Intended use

The following details apply to the following product:
Awning window system

The product is an external sun shading system that may be used for sun protection and glare control on vertical glass surfaces. The product reduces the incidence of light and optimises the use of solar energy.

The product is intended to be used to protect against the sun, not the rain.

Installation in front of escape doors and escape windows is prohibited.

Inappropriate use may result in serious hazards.

All closures and awnings intended for external use are designed to handle a wind load of 1.1 kN/m² when retracted.

The directive entitled "Wind loads for construction of closures and awnings when retracted – Section 5.1.1" defines the positions at which these products can be installed without requiring special precautions [published by the Bundesverband Rollladen + Sonnenschutz e. V. and ITRS Industrieverband Technische Textilien - Rollladen - Sonnenschutz e. V.].

Additional loads on the product in the form of hanging objects could damage the product or cause it to detach from the wall and are therefore not permitted. WAREMA will not be liable for any ensuing damage.

To ensure intended use of the product it must be raised in time before any of the following conditions occur:

– Wind above the maximum permitted wind speed limit
– Snowfall/frost
– Storm fronts and bad weather fronts (gusts)

The intended use also includes observing these instructions and adhering to the service requirements they describe.

2.2 Parts description

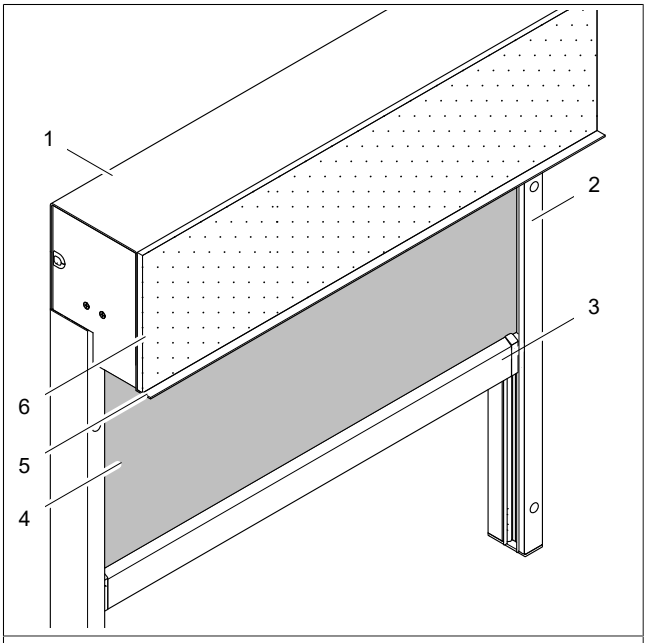

1	Box	4	Awning fabric
2	Guide rail	5	Lip (only for plaster model)
3	End rail with end joint	6	Plaster base plate (plaster model only)

Fig. 1: Parts overview of awning window system with easyZIP guidance

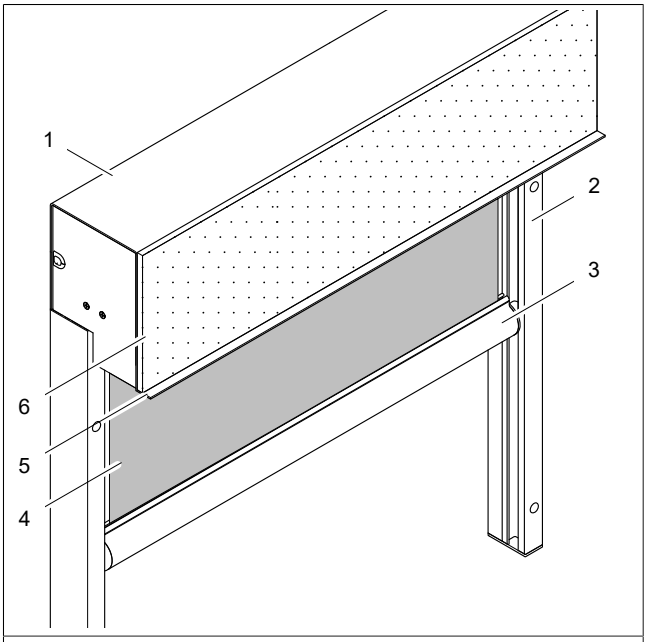

1	Box	4	Awning fabric
2	Guide rail	5	Lip (only for plaster model)
3	End rail with end joint	6	Plaster base plate (plaster model only)

Fig. 2: Parts overview of awning window system with rail guidance

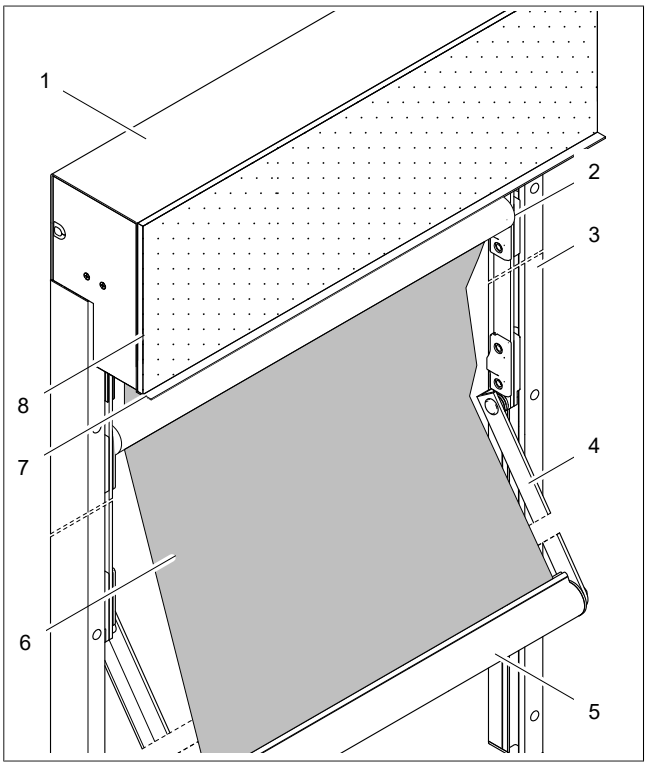

1	Box	5	End rail
2	Guiding tube	6	Awning fabric
3	Guide rail	7	Lip (only for plaster model)
4	Projection system	8	Plaster base plate (plaster model only)

Fig. 3: Parts description for awning window system as markisolette

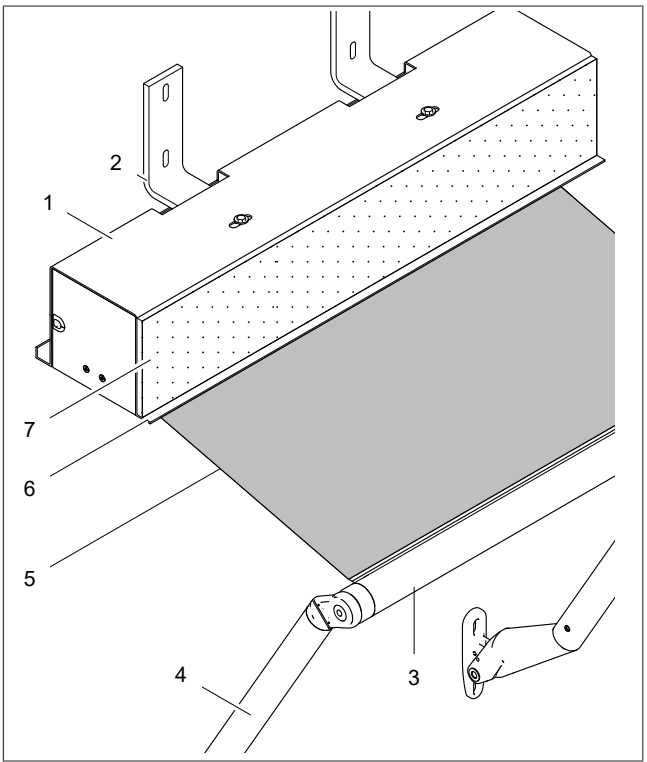

1	Cover panel	5	Awning fabric
2	Mounting bracket	6	Lip (only for plaster model)
3	End rail	7	Plaster base plate (plaster model only)
4	Drop arm		

Fig. 4: Parts overview of awning window system with drop arm

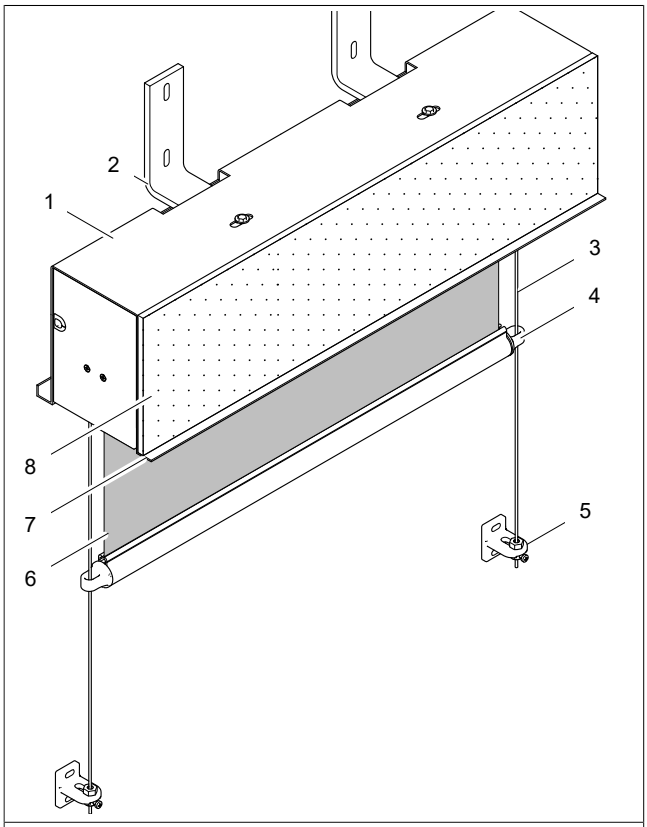

1	Cover panel	5	Tension cable bracket
2	Mounting bracket	6	Awning fabric
3	Tension cable	7	Lip (only for plaster model)
4	End rail with end joint	8	Plaster base plate (plaster model only)

Fig. 5: Parts overview of awning window system with cable guidance

2.3 Electric drive data

Parameter	Value
Current consumption [A]	0.45-0.90 A
Rated voltage	230 V/50 Hz
Degree of protection	IP 44
Short-term operation (S2)	4 min
Emissions sound pressure level	LpA ≤ 70 dB(A)*

* The sound pressure level LpA in a standard installation of the product on a test stand is ≤ 70 dB(A). This value may vary depending on the specific installation.

INFO
The table above shows a summary of the permissible motors.

2.4 Wind resistance

Achieved resistance to wind loads:
– Awning window system with easyZIP guidance

Order width ≤ 3000 mm: Class 6
Order width > 3000 mm ≤ 4000 mm: Class 5

Achieved resistance to wind loads:
– Awning window system with rail guidance
– Awning window system with drop arm
– Awning window system as markisolette



Class 2

Achieved resistance to wind loads:
– Awning window system with cable guidance



Class 1

The achieved class of resistance to wind loads does not allow any conclusions to be drawn about the suitability for use (raising/lowering, intermediate position) under actual wind loads. For this reason, WAREMA defines wind speed limits. Wind speed limits are the maximum permissible wind speeds which must not be exceeded. When the wind speed limits are reached, the product must be raised.

If a wind sensor is used (recommended by WAREMA), it must be ensured that the set wind speed limit relates to the wind speeds that actually occur at the product, e. g. by positioning the wind sensor close to the product or by means of an individual wind assessment. It is recommended that the wind sensor is set one level lower than determined (e. g. to 7 m/s instead of 10 m/s) to enable the product to be raised while also taking gusts of wind into account.

Wind speed limits for window system with rail guidance/with cable guidance/with drop arm/as markisolette

The maximum permitted wind speed (wind speed limit) for the product (raisin and lowering) is: see the following table.

Basis for the following table:

▶ The window is closed.

Lateral guidance	Wind speed limit [m/s]
Cable guidance Distance from glass surface: < 100 mm	7
Cable guidance Distance from glass surface: 100 - 300 mm	5
Rail guidance Distance from glass surface: < 100 mm	10
Rail guidance Distance from glass surface: 100 - 300 mm	7
Markisolette Distance from glass surface: < 100 mm	10
Markisolette Distance from glass surface: 100 - 300 mm	7
Drop arm Distance from glass surface: < 100 mm	10
Drop arm Distance from glass surface: 100 - 300 mm	7

Tab. 1: Wind speed limits for raising and lowering the window awnings without easyZIP guidance, depending on the distance to the glass surface and the lateral guidance (details in m/s)

Wind speed limits for awning window system with easyZIP guidance

INFO
Due to their design, awning window systems with easyZIP guidance withstand markedly higher wind speeds in the lowered position and when being raised than when being lowered (DOWN direction).

The supplied product features a motor with responsive obstacle detection or, alternatively, a motor without obstacle detection mechanism.

The motor **with** obstacle detection is capable of detecting an excessive wind load while the product is being lowered, which means that the product can be stopped before damage can result. For this reason, different wind speed limits apply in this case than for a motor without obstacle detection (Tab. 2).

The motor **without** obstacle detection is not capable of reliably detecting an excessive wind load while the product is being lowered so that the product could be stopped before damage can result.For this reason, specific wind speed limits apply in this case while the unit is being lowered.Tab. 3

Basis for the following table (motor with obstacle detection):

- ▶ Raise the awning. / The window is closed.
- ▶ Installation: Installation on a facade
- ▶ Distance between awning fabric and glass surface: ≤ 100 mm

Order height in [mm]	Order width in [mm]						
	up to 1000	up to 1500	up to 2000	up to 2500	up to 3000	up to 3500	up to 4000
up to 1000	24	24	24	24	24	24	24
up to 1500	24	24	24	24	24	24	24
up to 2000	24	24	24	24	24	24	24
up to 2500	24	24	24	24	24	24	20
up to 3000	24	24	24	24	24	20	20
up to 3500	24	24	24	24	20	20	20
up to 4000	24	24	24	20	20	20	20
up to 4500	24	24	24	20	20	20	20

Tab. 2: Wind speed limits for awning window system with easyZIP guidance (motor with obstacle detection) for raising the unit (details in m/s)

The distance of the awning fabric from the glass surface (if a different distance than listed in the basis for the wind speed limit table is possible) and certain fabric qualities influence the wind resistance capability of the product. For this reason, reduced wind speed limits apply to the situations (see the following overview for the reduction of the table values).

The permissible wind speed is reduced in defined levels (see Tab. 4).

The table values (m/s) should be changed in the following cases:

1 Distance between awning fabric and glass surface
  – > 100 and ≤ 200 mm — Reduce value by 2 levels (see Tab. 4)

2 Fabric qualities
  – Screen 1 %/Soltis 92/Twilight Pearl — Reduce value by 1 level (see Tab. 4)
  – Screen 0 %/Soltis B92/PVC window/acrylic — Reduce value by 2 levels (see Tab. 4)

Basis for the following table (motor without obstacle detection):

- ▶ Lowering the awning/The window is closed.
- ▶ Distance between awning fabric and glass surface: ≤ 300 mm

Order height in [mm]	Order width in [mm]						
	up to 1000	up to 1500	up to 2000	up to 2500	up to 3000	up to 3500	up to 4000
up to 1000	13	13	13	13	13	13	10
up to 1500	13	13	13	13	13	13	10
up to 2000	13	13	13	13	13	13	10
up to 2500	13	13	13	13	13	13	10
up to 3000	13	13	13	13	13	10	10
up to 3500	13	13	13	13	10	10	10
up to 4000	13	13	13	10	10	10	10
up to 4500	13	13	13	10	10	10	10

Tab. 3: Wind speed limits for awning window system with easyZIP guidance (motor without obstacle detection) for lowering the unit (details in m/s)

The permissible wind speed is reduced in defined levels (see Tab. 4).

The table values (m/s) should be changed in the following cases:

1 Fabric qualities
- – Screen 1 %/Soltis 92/Twilight Pearl — Reduce value by 1 level (see Tab. 4)
- – Screen 0 %/Soltis B92/PVC window/acrylic — Reduce value by 2 levels (see Tab. 4)

Calculation examples:

0	1	3	5	7	10	13	17	20	24	28	32

Tab. 4: Levels for determining the wind speed limits(details in m/s)

If the wind speed is reduced by, for example, 3 levels, the value listed three cells to the left must be used.

Example (motor with obstacle detection):

Basis for calculation:
- ▶ Order width: 2000 mm
- ▶ Order height: 2000 mm
- ▶ Screen fabric quality: Screen 1 %

Determined values:
- ▶ Wind speed limit as per table: 24 m/s

Example (motor without obstacle detection):

Basis for calculation:
- ▶ Order width: 2000 mm
- ▶ Order height: 2000 mm
- ▶ Screen fabric quality: Screen 1 %

Determined values:
- ▶ Wind speed limit as per table: 13 m/s
- ▶ Reduction of value by **1** level due to fabric quality: from 13 m/s to 10 m/s
- ▶ Wind speed limit to be set on wind sensor: 10 m/s

2.5 Declaration of performance

The declaration of performance can be found at (**www.warema.de/ce**).

3 Operation

INFO

- Only operate the product if it is in technically perfect condition.
- Do not operate a product if it is damaged. Always contact the specialist dealer and protect the product against being operated as agreed with the specialist.

3.1 Product with motor

WARNING
Risk of crushing from failure to exercise care during operation.

Persons who are located within the projection area may be injured.

- Keep the path of the product clear of people.
- Keep children away from the operating elements.

Movement	
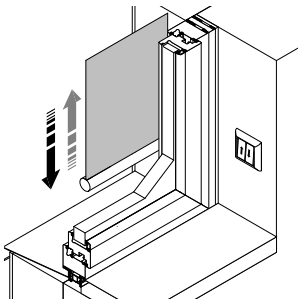 or (depending on the model) 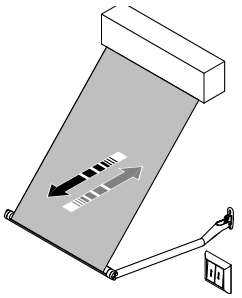	- Operate the switch. The product moves in the selected direction. - Press the button on the hand-held transmitter. The product moves in the selected direction.

INFO
The product has an upper and lower limit position. The product automatically stops at this point.

The product can be stopped in any position.

Operation using a central control unit

NOTICE
Product damage from failure of the control unit!

Under certain external conditions, such as a power failure or a malfunction, the control unit will not be functional. In this case, the control unit will not be able to operate the product and the product may be exposed to extreme loads caused by the weather conditions.

- Set the control to manual operation if you are going to be away for a long period.

INFO
of the motors used are not intended for continuous operation.

The integrated thermal protection switches the motor off after approx. 4 minutes. The product will be ready again for use after 10 to 15 minutes.

- Adjust the control unit in such a way that continuous operation of the motor is not possible.
- Follow the operating and installation instructions of the control unit.

Operation using a hand-held transmitter

INFO
Instructions on how to operate the hand-held transmitter are contained in a separate manual for the hand-held transmitter.

3.2 Incorrect operation

Accessibility of the operating elements

- Never let children play with the operating elements of the product, such as the hand-held transmitter or switch.
- Keep the hand-held transmitter out of the reach of children.

Danger of crushing, shearing and entanglement

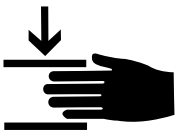

- While the product is moving, keep persons away from the product.
- While the product is moving, do not reach between the moving parts. Limbs can get caught between or in the moving parts and may become crushed or severed.

Products operated by means of a control unit may start moving at any time and without prior notice. Inform people, including children, who may be located in the vicinity of the product about the danger involved with the product to eliminate the risk.

Operation in stormy weather



The product must be raised by hand before a bad weather front passes over, even if a control is being used. The control triggers a move command for the product if the set limit value is exceeded in order to move it to the protected upper limit position. If strong gusts of wind come up suddenly, the product is exposed to a larger load for which it was not designed for an indefinite period.

- Raise the product if the wind speed limits are exceeded.
- Before bad weather arrives, the product must be raised by hand immediately.
- All other movements by the product must be prevented under heightened wind loads.

Operation in wet weather

NOTICE
Deterioration of the awning fabric due to moisture!

Moisture promotes wrinkling and waffling.

- Lower awnings after it stops raining to dry awning fabric that got wet.



The product must be retracted by hand before a bad weather front passes over, even if a control is being used.

- Before bad weather arrives, raise the product by hand.
- Lower the awning fabric after it stops raining to dry the awning fabric that got wet.

Operation in cold weather or winter

NOTICE
Product damage from forceful operation!

After an impact with condensation water, rain or snow, the product can freeze up at low temperatures.

- Do not use the product under icy conditions. The product may be used again after thawing.
- When using a control unit without an ice alarm, automatic operation should be deactivated in winter.



- Do not raise or lower the product in snow.
- Do not operate the product if it is frozen.
- Switch off the automatic control in winter.

4 Service

Proper and regular cleaning and maintenance and the exclusive use of original spare parts are essential for trouble-free operation and a long product service life.

INFO
When performing product maintenance or working in the immediate vicinity of the product, e. g. when cleaning windows, product movement must be prevented.

A monitored overriding locking mechanism must eliminate all possible operation.

WARNING
Risk of injury from operation of the product when it is out of sight!

The product may unexpectedly start moving during cleaning or maintenance.

- De-energise the product and secure it against being switched on again.

CAUTION
Risk of injury from falling off the climbing aid!

Climbing aids (e. g. ladders, scaffolding, etc.) may tip over if improperly erected.

- Position climbing aids on level and firm ground.
- Do not lean climbing aids against the product.

CAUTION
Risk of injury from falling!

There is a risk of falling during maintenance work.

- Take suitable safety precautions to prevent or arrest falls.

INFO
The awning fabric can become electrostatically charged. Contact with people or objects may result in electrostatic discharge from charged fabric.

4.1 Cleaning and care

Over time, a film of dirt will form on the surfaces of sun shading products due to environmental influences.

Due to the effects of solar radiation, this soiling can become permanently burnt into or stuck to the surface coating. These factors reduce the value and may impair the proper functioning of the sun shading product.

To enhance the durability of the sun shading product, its surfaces should be cleaned regularly or **at least once a year.**

For awning fabric, this depends on the degree of soiling.

In certain ambient conditions, such as those found near industrial zones and close to heavy road traffic, the sea (salty air) or swimming pools (air with chlorine), more frequent cleaning may help to protect against surface damage caused by these conditions and against the heightened risk of corrosion.

Purpose of cleaning and care

The benefit provided by regular and proper cleaning and care is that the value of the product is preserved and its service life extended. The purpose of repeatedly cleaning the product is to preserve the well-maintained appearance of both the building and the product.

Results of cleaning

NOTICE
Product damage from incorrect cleaning!

Incorrect cleaning procedures may result in damage to the product or product parts. Surfaces and textures may be permanently altered (e. g. scratches).

- Do not use high pressure washers, steam washers, abrasive sponges, abrasive cleansers, or aggressive cleaning agents or solvents such as alcohol or naphtha.
- Do not use chlorinated cleaning agents on or near the product.
- Acidic or oxidizing cleaning agents may be used with all fabric types except WAREMA SecuTex fabric A2.
- Unlike other fabric types, WAREMA SecuTex fabric A2 can be cleaned with cleaning agents containing alcohol, which is recommended. Other types of cleaning agents destroy the aluminium vapour coating.
- Do not wash the awning fabric in a washing machine or other similar equipment.
- Do not rub the awning fabric excessively with a hard brush/sponge or other hard objects. This may damage the surface.
- Do not raise awning fabric that has gotten wet. This may cause moulding or spotting.

Under no circumstances will claims for damages arising from these cleaning instructions be honoured, since the effectiveness of these measures depends on a large number of factors that vary widely from case to case.

The effort required for cleaning and the cleaning results themselves depend on the degree of soiling. Surfaces that have been exposed to the influences of weather over many years but have not been cleaned are difficult, if not impossible, to restore to their original condition.

General information on cleaning

WARNING
Risk of injury from electric shock on a motorized product!

If a live component (e. g. motor) comes into contact with water, a short circuit may occur or electricity may flow.

- Keep water away from all live components.

Tip/recommendation

To properly clean the surfaces, use a suitable cleaning glove together with an appropriate cleaning agent concentrate for sun shading products.

Preparing for cleaning

- When cleaning the product, protect adjacent areas against soiling.

INFO
Cleaning will vary with the fabric quality and the type of coating (e. g. special coating such as aluminium vapour coating). Cleaning with water and a mild soapy solution is recommended. If you have any questions, please contact your WAREMA specialised retailer for further information.

Aids required for cleaning:

- Whisk broom (soft bristles)
- Vacuum cleaner (optional)
- Bucket
- Low-calcium water (recommendation)
- WAREMA cleaner for sun shading systems
- Fabric cleaner for sun shading systems
- Fabric impregnation of sun shading systems
- WAREMA cleaning glove
- Cotton cloth
- Additionally for awning fabric
  - Rubber eraser (non-marking)
  - Adhesive tape (to pick up soiling with the adhesive tape)
  - Mild detergent

INFO
Step-by-step cleaning from top to bottom

1 Fabric guidance (if present)
2 Awning fabric (as needed)
3 Drop arms (if present)

Performing preliminary cleaning

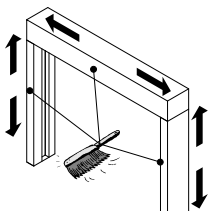

- Remove any loose soiling from the entire product (e. g. dust). A whisk broom or vacuum cleaner can be used for this.

or

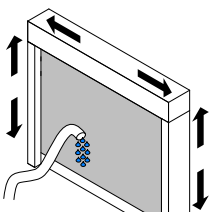

- If the product is installed outside (outdoors), you can also rinse off loose dirt with clear water at a low water pressure.
- Before you start, remove any objects that must not get wet.

Performing detailed cleaning

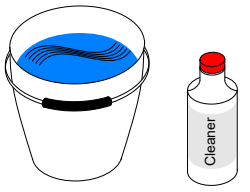

- Prepare a bucket with water and cleaning agent for sun shading products. Note the dosing quantities specified by the cleaning agent manufacturer.
- Wet the cleaning glove.

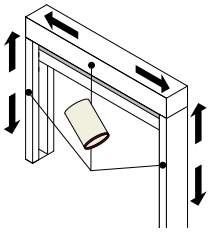

- Clean the product components with a wiping motion. Repeat the procedure as needed based on the degree of soiling.

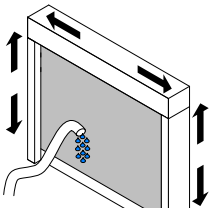

- Remove the detached soiling before drying.

Dry cleaning the awning fabric

In some cases, smaller spots and isolated dirty streaks can be cleaned without water.

- Dab off/strip away soiling with adhesive tape.

  and/or
- Remove soiling with a non-marking rubber eraser (by applying light pressure).
- Remove soiling with a vacuum cleaner if necessary (on the low setting).

Wet cleaning the awning fabric

Soiling or crusting spread over a large area must only be removed when wet, in order to keep the dirt from being rubbed into the fibres and spaces between the fibres.

The weather should be dry and at least +5 C.

5-10% mild detergent

- Add a 5-10% mild washing detergent to lukewarm water (max. 40 °C). Build up a lather by squeezing out a sponge several times.
- Apply the lather to the soiled locations and let it soak in for 15-20 minutes.
- Rinse the awning fabric with clear water at a low water pressure.
- Repeat the procedure as needed based on the degree of soiling.

Drying the product

- Lower the product into the lower limit position.

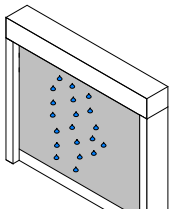

- Leave awning fabric that has become wet to air-dry.

INFO
To prevent scale marks from forming around dried water droplets, the surfaces of the product can be rubbed dry using a microfibre or cotton cloth.

Inspecting the product during cleaning

- Operate the product and inspect the operating elements for visible wear and damage (visual check).
- Check that the fixing points are firmly connected (visual check).
- Check the mounting substructure for damage (visual check).

INFO
Wear and damage to the operating element or product as well as damage to the mounting substructure may impair the product and result in secondary damage.

If you should notice any irregularities during the visual check of the product, proceed as described below.

- Take the product out of service.
- Have any damage repaired by a qualified specialist.

4.2 Maintenance

CAUTION
Risk of injury from inadequate product knowledge!

Familiarity with the functions and design of the product is required to ensure that it can be worked on safely. Insufficient product knowledge can result in dangerous situations.

- Have service tasks performed by a qualified specialist.

The maintenance tasks must only be performed by a qualified specialist. We recommend signing a service agreement.

Service is a preventative maintenance and contributes to keeping a product functional as long as possible.

The product must be serviced at least once a year.

WARNING
Risk of injury caused by irregular maintenance!

Operating safety may be seriously diminished, and the product may fail. People can be injured from contact with damaged parts.

- Have the product checked regularly by a qualified specialist for signs of wear and damage, e.g. to electrical lines.

- Check the product for visible wear and damage. If necessary, make a recommendation to the owner.
- Check the tension of the cable guidance. Adjust the cable guidance tension if necessary.
- Perform a functional check, and inspect the limit positions of the product. Adjust the limit positions if necessary (see the installation instructions and/or setting instructions).

INFO
To ensure proper functioning and your continued enjoyment of the product, WAREMA recommends having it professionally maintained once a year.

Information on this can be obtained from your WAREMA contracting partner or at **www.warema.de/service**.

4.3 What you should know about awning fabrics

Technical fabrics may exhibit certain characteristics due to production and sizing that may appear to the operator to be "faults".

The blemishes described below have no influence on the usability and durability of the awning fabric [excerpt from the Guideline for the Evaluation of Preassembled Awning Fabrics – published by the ITRS Industrieverband Technische Textilien Rollladen - Sonnenschutz e.V.]:

Wrinkles and folding lines

Wrinkles can be produced when the fabric is assembled (cut and sewn) and when it is folded. Surface effects (shifts in pigmentation) can occur in the wrinkles. When viewed against the light, these resemble dirty marks (especially on light-coloured fabric).

Chalk lines

These are light stripes of the impregnating material on the fabric surface. They result from handling the fabric during production and assembly of the units. Although the fabric is handled with special care, these effects cannot be fully avoided in dark fabrics.

Waviness in the seams and fabric panels

As the fabric is wound onto and off of the shaft, it is tightened more at the hems, seams and panels than between the seams. The resulting tension in the fabric can lead to waviness (e. g. waffle or fishbone patterns) that "digs" into the fabric. The waves are visible when the unit is open.

Waffling

Because of the production method, waffling may form under certain weather conditions and in certain fabric sizes. This effect is more visible in unfavourable lighting conditions. The formation of waffling is accelerated and enhanced through wetness (humidity, rain). If a fabric that has been "softened" in this way is retracted, waffling and wrinkles can become particularly pronounced.

Weave flaws

Spinning of the yarns as well as warping in the weaving mill and the weaving process itself is executed under tension. The yarn may break. This will lead to knots. Irregular thread thicknesses are seen as light areas or burls in the fabric.

4.4 Spare parts

INFO
To ensure that your product continues to function properly, and to prevent the loss of its approved status, only use original spare parts.

To order, contact your WAREMA dealer.

4.5 Repair

CAUTION
Personal injury resulting from inappropriate repairs!

Familiarity with the functions and design of the product is required to ensure that it can be worked on safely. Insufficient product knowledge can result in dangerous situations.

- The product should only be repaired by a qualified specialist.

Removing/installing the inspection cover

INFO
To exchange the motor or fabric, remove the inspection cover. Note the following steps.

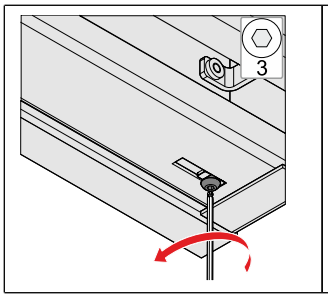

- Loosen the screw of the lock on the inspection cover (do not remove).

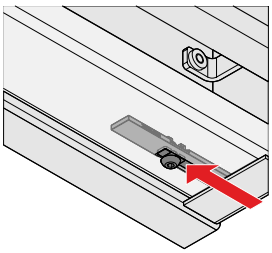	■ Slide on the lock all the way to the stop.
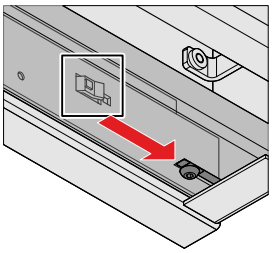	■ Slide the inspection cover toward the side cover and release it from the rear hook.
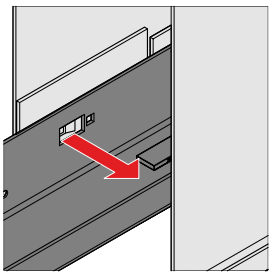	■ Pull the inspection cover away from the rear hook.
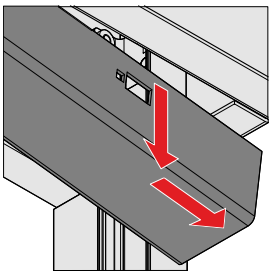	■ Swing the inspection cover down out of the cover panel and remove it.

INFO
Install the inspection cover in reverse order.

Important for the correct seat of the inspection cover!	
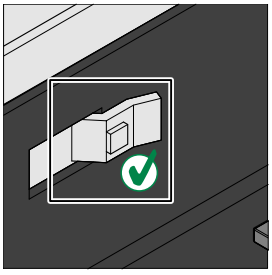	The inspection cover must be secured by the rear hook.

Important for the correct seat of the inspection cover!	
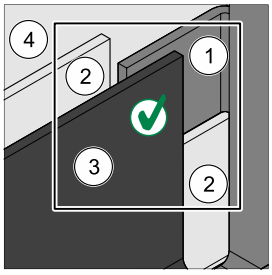	1 Side over tab 2 Cover panel reinforcement 3 Inspection cover 4 Cover panel (inside) The tab [1] of the side cover must always be in contact with the wall of the cover panel [4]. The inspection cover [3] covers the cover panel reinforcement [2] and the tab [1].

4.6 Warranty

Subject to the statutory period of limitation for warranty claims. This requires regular maintenance. The warranty does not include wear parts or optical changes in line with the type of material used (e. g. bleaching of surfaces caused by UV rays).

5 Dismantling/disposal

CAUTION
Risk of injury due to incorrect dismantling!

A lack of appropriate knowledge when dismantling the product can lead to injuries and/or damage to the adjacent parts.

■ Have the units dismantled by a qualified specialist.

Dismantling of the product must be undertaken by a qualified specialist. Ask WAREMA for any missing documents before commencing maintenance.

INFO
Electrically operated products contain integrated electrical or electronic components, such as the motor, control and lines. These components must be removed and disposed of separately from the product as described below (Disposal).

WARNING
Electric shock!

When working in the immediate vicinity of potentially live parts, such as electrical lines, contact may result in an electric shock.

■ De-energise the product and secure it against being switched on again.

Dismantling/disposal

Disposal

Should the product no longer be required, ensure that it is disposed of correctly in accordance with the relevant regulations.



Components identified in this manner should not be disposed of with the household waste.

Products marked with the symbol must be handled as follows according to legal regulations:

- The electric and electronic components removed from the electrically operated product and other electrical devices belonging to the product must be disposed of separately from unsorted household waste.
- Used batteries that are not enclosed in the used device and lamps that can be removed from the used device without destroying it are to be disposed of separately.
- Distributors of electric devices or disposal operations are required to take back the devices at no charge.
- Deletion of personal data contained in the electric device before disposal is the responsibility of the owner/operator.

6 Troubleshooting

INFO

- Problems described here without reference to a qualified specialist or certified electrician may be resolved independently.
- All other problems listed must be handled by a qualified specialist or certified electrician.

Fault: The motor is not functioning.			
	Cause	**Remedy**	**Note**
	The thermal protection switch on the motor was triggered.	Wait 10 to 15 minutes and then try again.	If the motor is operated at frequent intervals, the thermal protection switch on the motor switches it off to prevent it from overheating. The motor will be ready to operate again after it has cooled down. This is not a fault.
	A higher-level control command has been issued.	Wait for the on/off delay and then try again.	
	No voltage is applied.	Check the power supply fuse.	Have the check carried out by a certified electrician.
	The motor is faulty.	Replace the motor.	Have the motor replaced by a specialist firm.

Malfunction: The end rail does not move to the required limit position			
	Cause	**Remedy**	**Note**
	The motor limit positions are incorrect.	Readjust the motor.	Have the adjustment carried out by a specialist firm.

7 Declaration of Conformity

Excerpt from the declaration of conformity; the full document is available at **www.warema.de/ce**.

The product:

WAREMA window awnings

Type:

- Front-mounted awning
- Front-mounted awning Pure with easyZIP guidance
- Awning window system
- Top-mounted awning for new buildings
- Basic awning
- Basic shaft awning
- Shaft awning system

Purpose: External textile sun shading system

When used as intended, meets the basic requirements in the following EU directives and harmonised standards.

Machinery Directive 2006/42/EC:

EN 13561	External blinds and awnings - Performance requirements including safety
EN 60335-2-97	Household and similar electrical appliances - Safety - Part 2-97: Particular requirements for drives for rolling shutters, awnings, blinds and similar equipment

RoHS Directive 2011/65/EU:

Directive on electromagnetic compatibility 2014/30/EU:
Used for motor drives without an integrated radio receiver.

Directive on radio equipment 2014/53/EU (RED):
Use for motor drives with an integrated radio receiver or for WAREMA components with an integrated radio receiver.

Person in charge of the compilation of the technical documents: Elke Granzer; for address, see manufacturer.

Manufacturer:

WAREMA Renkhoff SE
Hans-Wilhelm-Renkhoff-Str. 2
97828 Marktheidenfeld
Germany

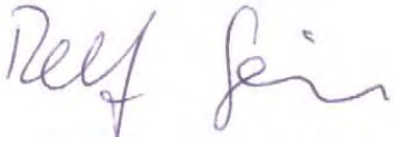



Ralf Simon
Executive Director Research and Development

Elke Granzer
Technical Support R & D

Marktheidenfeld, Germany, March 2023